LEISURE FURL® PART NO'S.

COASTAL
COASTAL PLUS
14/5, 18/6
19/6
20/7, 25/8

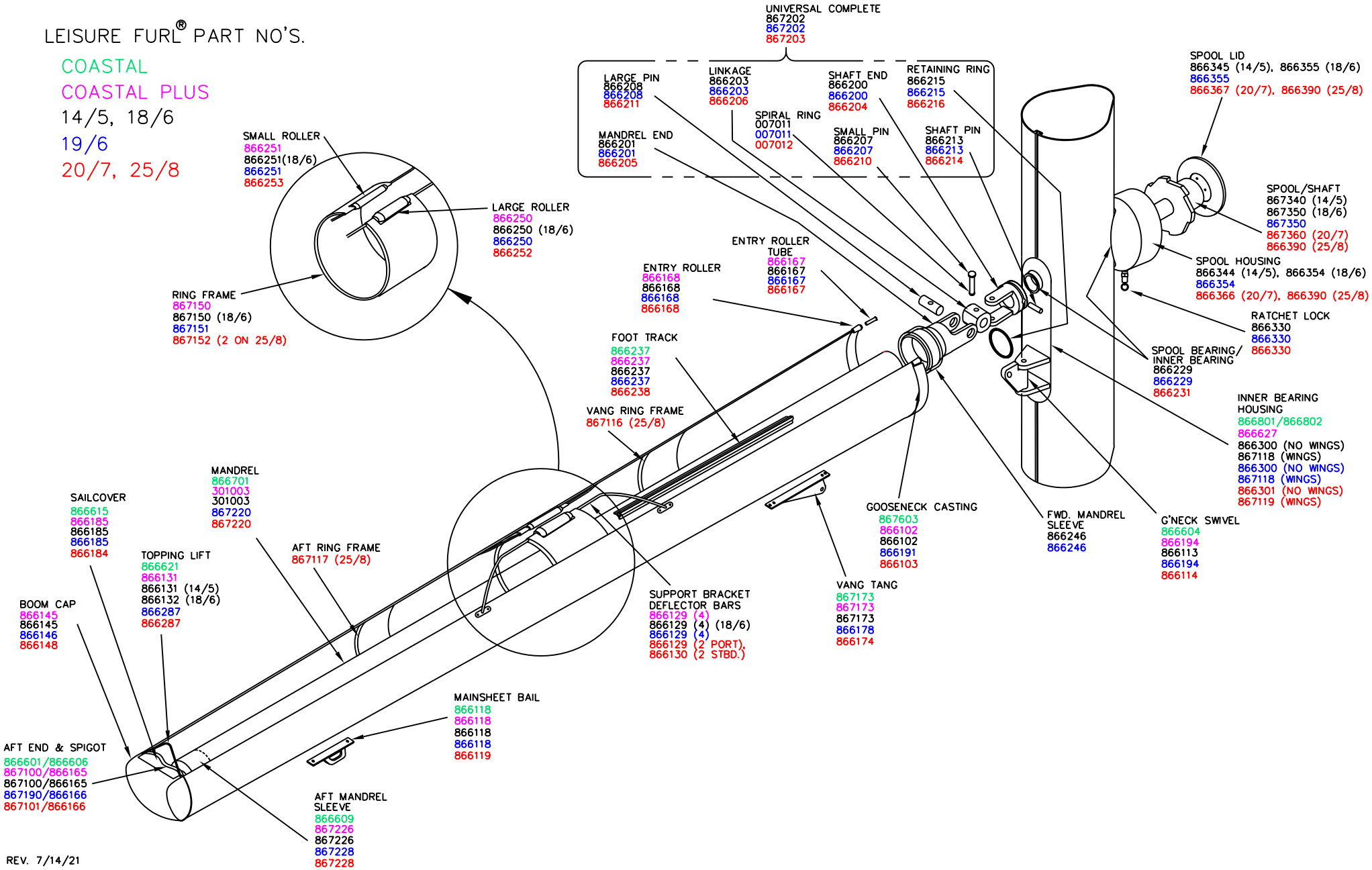

REV. 7/14/21